Cambridge International AS & A Level

Cambridge International Examinations
Cambridge International Advanced Subsidiary and Advanced Level

CANDIDATE NAME

CENTRE NUMBER | | | | | |

CANDIDATE NUMBER | | | | |

5102063129

PHYSICS **9702/33**

Paper 3 Advanced Practical Skills 1 **October/November 2014**

2 hours

Candidates answer on the Question Paper.

Additional Materials: As listed in the Confidential Instructions.

READ THESE INSTRUCTIONS FIRST

Write your Centre number, candidate number and name on all the work you hand in.
Write in dark blue or black pen.
You may use an HB pencil for any diagrams or graphs.
Do not use staples, paper clips, glue or correction fluid.
DO **NOT** WRITE IN ANY BARCODES.

Answer **both** questions.
You will be allowed to work with the apparatus for a maximum of one hour for each question.
You are expected to record all your observations as soon as these observations are made, and to plan the presentation of the records so that it is not necessary to make a fair copy of them.
You are reminded of the need for good English and clear presentation in your answers.

Electronic calculators may be used.
You may lose marks if you do not show your working or if you do not use appropriate units.

Additional answer paper and graph paper should be used only if it becomes necessary to do so.

At the end of the examination, fasten all your work securely together.
The number of marks is given in brackets [ ] at the end of each question or part question.

For Examiner's Use	
1	
2	
Total	

This document consists of **12** printed pages.

© UCLES 2014

CAMBRIDGE International Examinations

You may not need to use all of the materials provided.

1 In this experiment, you will investigate the motion of a ball and rod.

(a) Press the ball of modelling clay onto the end of the wooden rod, as shown in Fig. 1.1.

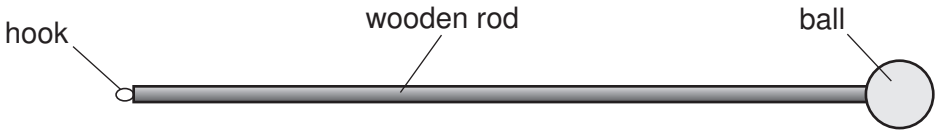

Fig. 1.1

(b) **(i)** Set up the apparatus as shown in Fig. 1.2 with the nail through the hook in the wooden rod.

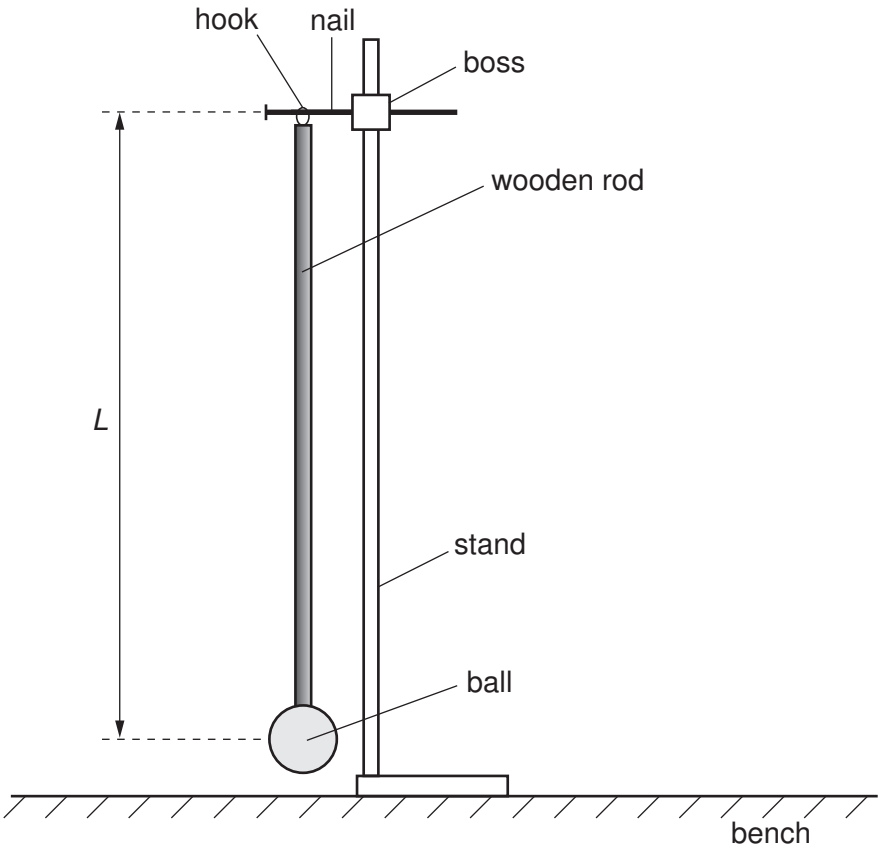

Fig. 1.2

(ii) Measure and record the distance *L* between the nail and the centre of the ball.

L = ...

© UCLES 2014

(c) Move the bottom of the rod to the left.

Release the rod and watch the movement.

The rod will move to the right and then to the left again, completing a swing as shown in Fig. 1.3.

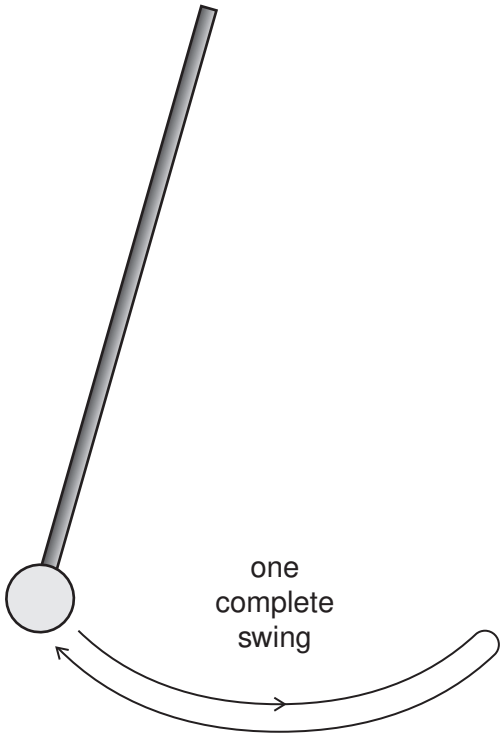

Fig. 1.3

Measure and record the time for at least 10 swings.
Record enough readings to determine an accurate value for the time T taken for one complete swing.

T = ... [2]

(d) Decrease L by moving the ball along the rod, and repeat **(b)(ii)** and **(c)** until you have six sets of values of L and T.

Include values of T^2L and L^2 in your table.

[10]

(e) **(i)** Plot a graph of T^2L on the y-axis against L^2 on the x-axis. [3]

(ii) Draw the straight line of best fit. [1]

(iii) Determine the gradient and y-intercept of this line.

gradient = ...

y-intercept = ...

[2]

© UCLES 2014

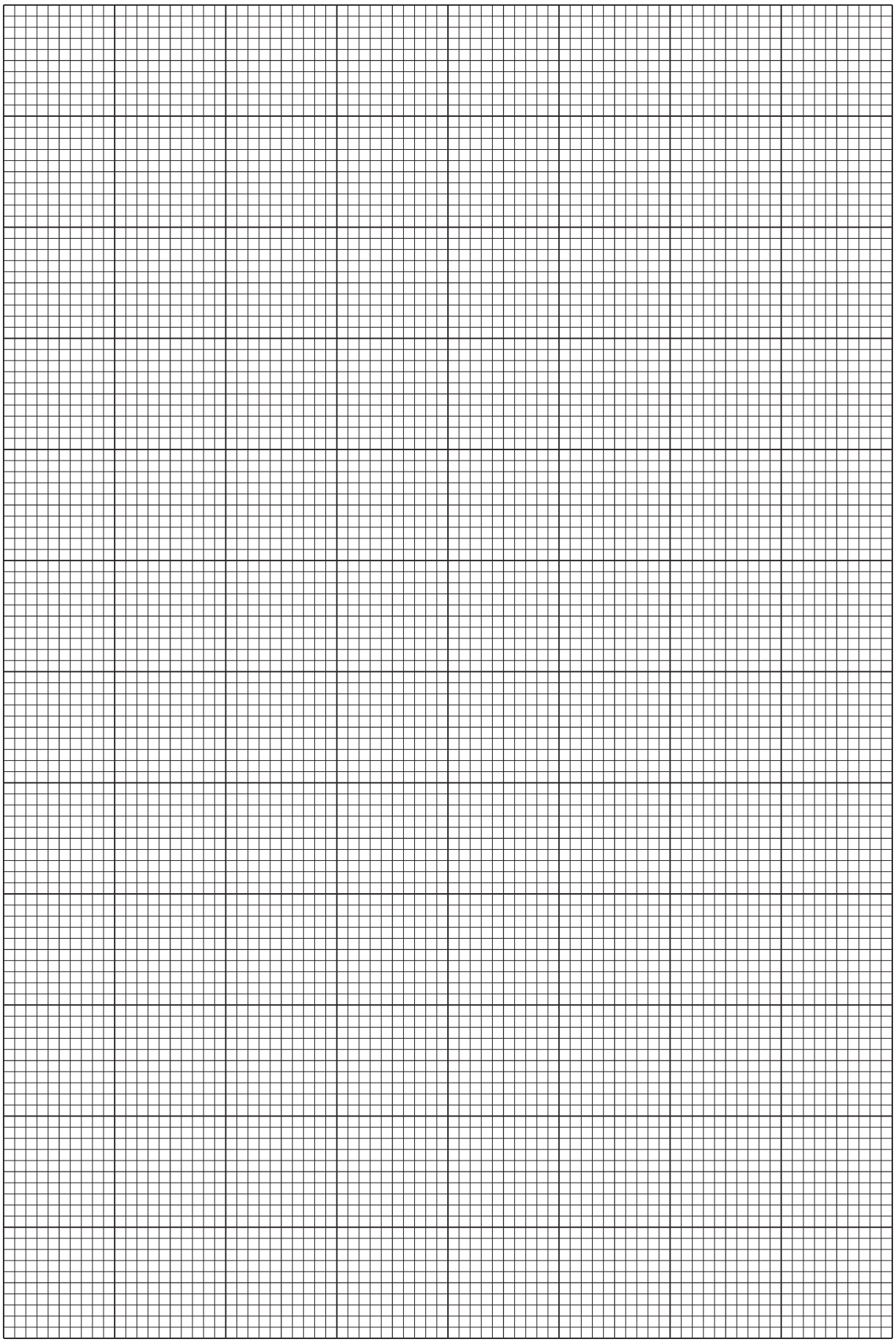

(f) The quantities T and L are related by the equation

$$T^2L = AL^2 + B$$

where A and B are constants.

Use your answers in **(e)(iii)** to determine the values of A and B.
Give appropriate units.

A = ...

B = ...

[2]

You may not need to use all of the materials provided.

2 In this experiment, you will investigate how the rebound height of a ball from an inclined board depends on the angle of the board.

(a) (i) You have been provided with a ball and a board.
Place the board on the bench.
Hold the ball above the board as shown in Fig. 2.1.
Move the ball until the height h_1 of the bottom of the ball above the board is 40 cm.

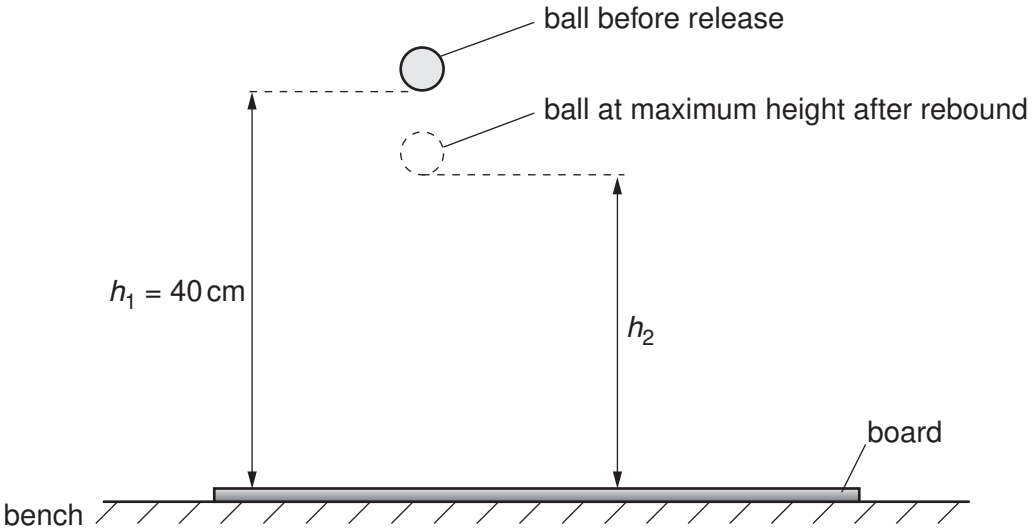

Fig. 2.1

(ii) Release the ball.
Measure and record the maximum height h_2 of the ball after rebound.

h_2 = ...[2]

(iii) Calculate q, where

$$q = \frac{h_2}{h_1}.$$

q = ...

(b) (i) Raise the board so that it makes an angle θ with the bench as shown in Fig. 2.2.

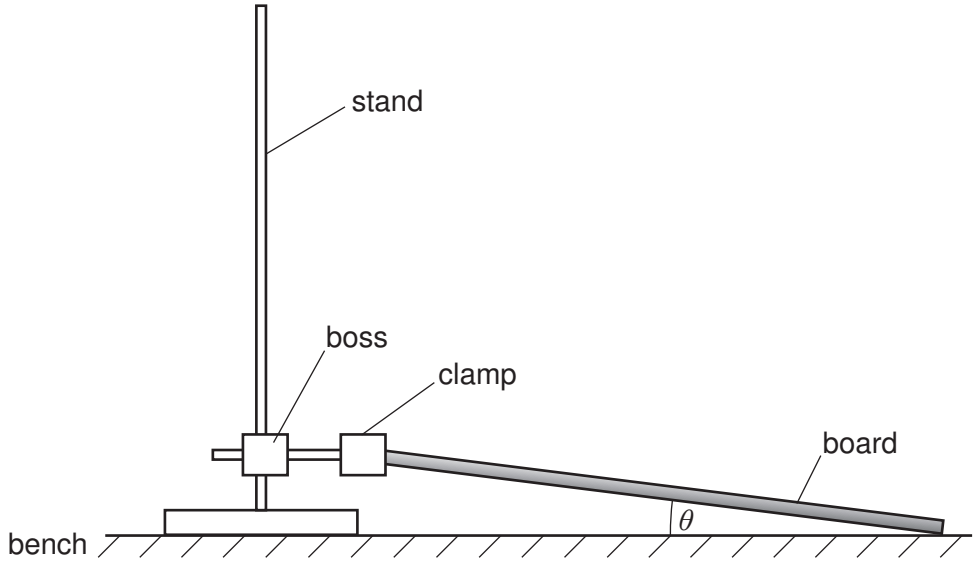

Fig. 2.2

(ii) Adjust the board until θ is in the range 10° to 12°.
Measure and record θ.

θ = ...[1]

(iii) Calculate $\cos^2(2\theta)$.

$[\cos^2(2\theta) = \cos(2\theta) \times \cos(2\theta)]$

$\cos^2(2\theta)$ = ...[1]

(iv) Justify the number of significant figures that you have given for your value of $\cos^2(2\theta)$.

.....

.....

.....[1]

(c) (i) Place the large container on its side with its open face towards the board as shown in Fig. 2.3.

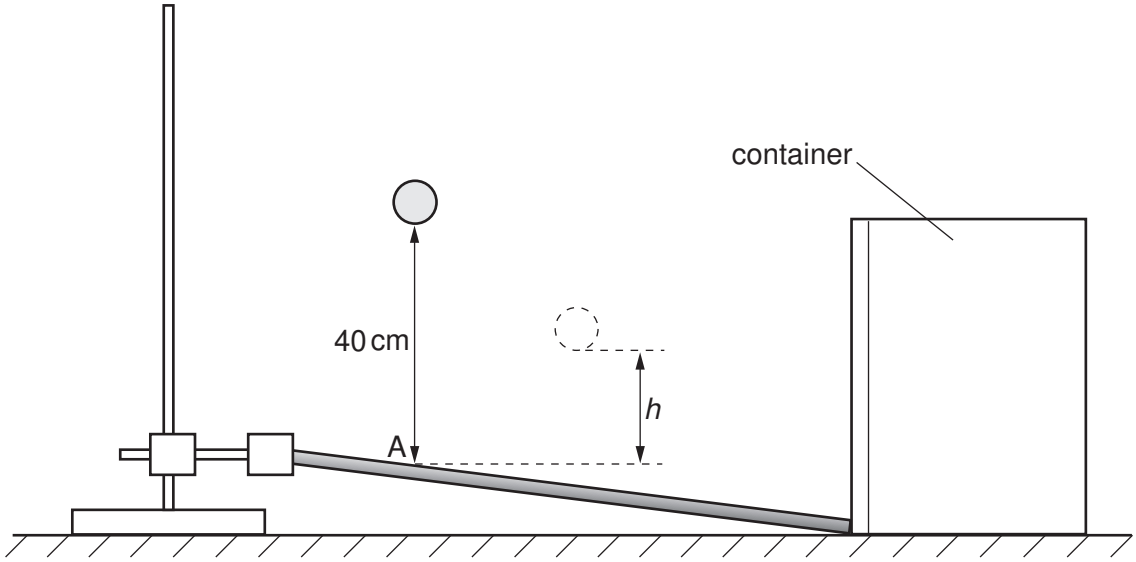

Fig. 2.3

(ii) Hold the ball 40 cm above the board.

(iii) Release the ball. Watch it bounce at A and follow a curved path before bouncing into the container.
Measure and record the maximum height *h* of the ball after rebound, as shown in Fig. 2.3.

h = ...[1]

(iv) Estimate the percentage uncertainty in your value of *h*.

percentage uncertainty = ...[1]

(d) (i) Adjust the board until θ is in the range 20° to 22°.
Measure and record θ.

θ = ...[1]

(ii) Repeat **(b)(iii)**, **(c)(ii)** and **(c)(iii)**.

$\cos^2(2\theta)$ = ...

h = ...
[2]

(e) It is suggested that the relationship between h, q and θ is

$$h = kq\cos^2(2\theta)$$

where k is a constant.

(i) Using your data, calculate two values of k.

first value of k = ...

second value of k = ...

[1]

(ii) Explain whether your results support the suggested relationship.

.....

.....

.....

.....[1]

(f) (i) Describe four sources of uncertainty or limitations of the procedure for this experiment.

1. .....

.....

2. .....

.....

3. .....

.....

4. .....

.....

[4]

(ii) Describe four improvements that could be made to this experiment. You may suggest the use of other apparatus or different procedures.

1. .....

.....

2. .....

.....

3. .....

.....

4. .....

.....

[4]

Permission to reproduce items where third-party owned material protected by copyright is included has been sought and cleared where possible. Every reasonable effort has been made by the publisher (UCLES) to trace copyright holders, but if any items requiring clearance have unwittingly been included, the publisher will be pleased to make amends at the earliest possible opportunity.

Cambridge International Examinations is part of the Cambridge Assessment Group. Cambridge Assessment is the brand name of University of Cambridge Local Examinations Syndicate (UCLES), which is itself a department of the University of Cambridge.

© UCLES 2014